Micro-Channel Water Cooled Single Bar Diode Laser

MCC09 Series

Features

- Long lifetime
- Low smile
- High power
- Narrow spectrum

Applications

- Pumping
- Medical
- Scientific research

Product Dimensions (mm)

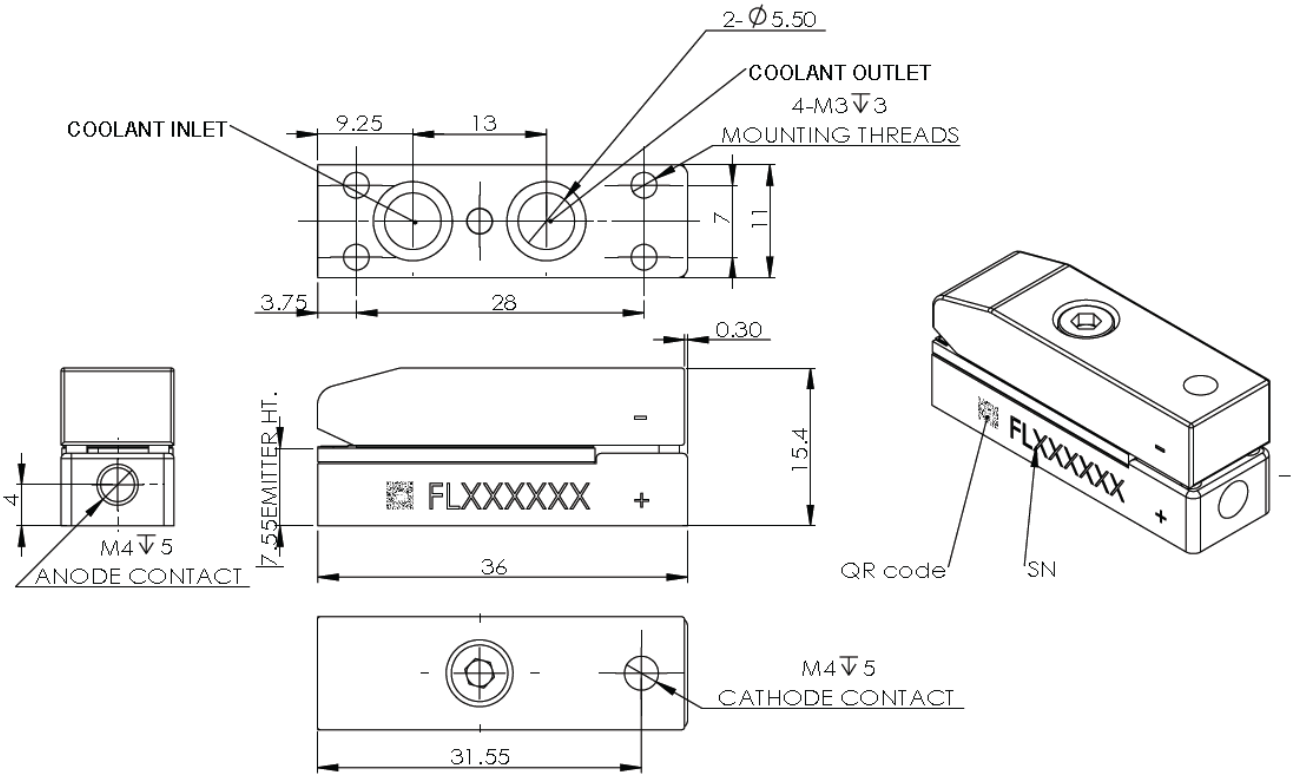

Remark: The structure drawing is for reference only. Please feel free to contact us for any special requirements.

Focuslight Technologies Inc.
Address: 56 Zhangba 6th Road, High-Tech Zone, 710077 Xi'an, Shaanxi, P. R. China
Tel: +86 29 8188 9945 | **Email:** sales@focuslight.com | **Website:** https://www.focuslight.com

Product Specifications

Product Code				(Typical Customizations)	
Part No. [1]		FL-MCC09-100-808	FL-MCC09-120-940	FL-MCC09-500-808(Q)	FL-MCC09-500-940(Q)
General Data	**Unit**	**Value**			
Operation Mode	-	CW	CW	QCW	QCW
Optical Data [2]					
Centroid Wavelength	nm	808	940	808	940
Wavelength Tolerance	nm	± 3	± 5	± 3	± 5
Output Power	W	100	120	500	500
Spectral Width FWHM	nm	≤ 3	≤ 3	≤ 4	≤ 5
Spectral Width 90% Energy	nm	≤ 6	≤ 6	≤ 6	≤ 8
Pulse Width	μs	NG	NG	200	600
Duty Cycle	%	NG	NG	≤8	≤8
Fast Axis Divergence (FWHM) [3]	°	35 (typical)	45 (typical)	35 (typical)	45 (typical)
Slow Axis Divergence (FWHM)	°	8 (typical)	10 (typical)	8 (typical)	10 (typical)
Polarization Mode	-	TE	TE	TE	TE
Wavelength Temp. Coefficient	nm / °C	~ 0.28	~ 0.34	~ 0.28	~ 0.34
Electrical Data					
Operation Current	A	≤ 100	≤ 120	≤ 450	≤ 450
Threshold Current	A	≤ 30	≤ 35	≤ 30	≤ 35
Operating Voltage per Bar	V	≤ 2	≤ 2	≤ 2.2	≤ 2
Slope Efficiency per Bar	W / A	≥ 1.1	≥1. 1	≥ 1.1	≥1. 1
Power Conversion Efficiency	%	≥ 50	≥ 55	≥ 50	≥ 55
Thermal Data					
Operating Temperature [4]	°C	20~30	20~30	20~30	20~30
Storage Temperature [5]	°C	0~55	0~55	0~55	0~55

[1] Part No. = Brand Code - Series - Power - Centroid Wavelength(- Collimation) (QCW Mode).
[2] Data at 25°C temperature, unless otherwise stated.
[3] Optional with fast axis collimation: Divergence ≤0.5°.
[4] Reduced lifetime if used above nominal operating conditions.
[5] A non-condensing environment is required for storage and operation below ambient dew level.

Focuslight Technologies Inc.
Address: 56 Zhangba 6th Road, High-Tech Zone, 710077 Xi'an, Shaanxi, P. R. China
Tel: +86 29 8188 9945 | **Email:** sales@focuslight.com | **Website:** https://www.focuslight.com